TRACTION
POWER
SYSTEMS

Sécheron

AUTOMATIC ASSURED RECEPTIVITY UNITS

EFFICIENT-**AARU**

EFFICIENT

POWER CONVERSION

Using experience accumulated over more than 50 years working in the field of traction power substations, Sécheron has designed the EFFICIENT product category from the ground up to cover all the customer needs for DC supplies.

All the EFFICIENT products are built specifically to comply with the most stringent requirements of usability, maintainability and durability in traction power application environments, maximizing the return of investment for our customers. These reliable and field-proven building blocks are also the basis for custom applications upon specific requests.

GENERAL INFORMATION

Sécheron automatic assured receptivity units (AARU) meet all railway industry requirements for absorbing excess regenerative braking energy. AARUs eliminate the need for braking resistors on board and protect against overvoltages. We can engineer a solution with the best technology for your needs.

The AARU is a wayside energy dissipation system designed to assure braking energy receptivity for train systems not equipped with on-board resistors. The controller cabinet is designed to be mounted inside the substation and connected to the DC switchgear lineup if necessary.

The Sécheron scope of supply includes a control unit in the form of a metal cubicle equipped with a power switch module and a braking resistor assembly composed of stainless steel grid resistors.

The AARU is typically configured with IGBT stacks that control energy dissipation by switching on and off the resistor bank(s).

MAIN BENEFITS

- Equivalent run time and energy dissipation in all resistors, avoiding premature deterioration of individual resistor sections
- Optimized response time
- Resistor only dissipates the braking power coming from the train
- No additional AC grid energy consumption
- No need of braking resistors installed on the rolling stock
- Protects equipment from overvoltages
- Low maintenance and easy access to all parts
- Reliable and robust

MAIN CHARACTERISTICS

	Unit	Values	
Standard product range		**750**	**1500**
Type	-	IGBT stacks AARU	IGBT stacks AARU
Rated peak power	[kW]	Up to 8 000	Up to 8 000
Rated load cycle	[%]	Up to 20	Up to 20
Rated DC voltage	[V]	750	1500
Operating voltage range	[V]	825 to 900	1 650 to 1 800
Rated insulation voltage	-	According to IEC 61992-1 cat. III and EN 50124	
Short-circuit withstand of enclosure frame leakage	[kA]	125	80
Cooling system	-	Forced air (IGBTs)	Forced air (IGBTs)
Noise level	[dB]	< 75	< 75
Auxiliary supply	[V]	DC 110AC 240 (1) (heaters and light)	DC 110AC 240 (1) (heaters and light)
Protection degree	-	IP20 / IP42	IP20 / IP42
Width	[mm]	1 520	1 520
Depth	[mm]	1 552.5	1 552.5
Height	[mm]	2 311	2 311
Weight	[kg]	1 360	1 370
Operating temperature	[°C]	0 to 45	0 to 45
Elevation	[m]	1 000	1 000

(1) 240V may be mandatory depending on the preload configuration.

AARU controller installed on-site

STANDARDS

Our products are fully compliant and type tested according to the following standards:

- **EN 60146-1** | Semiconductor converters – General requirements and line commutated converters – Part 1-1: Specification of basic requirements
- **EN 50121-5** | Railway applications – Electromagnetic compatibility – Part 5: Emission and immunity of fixed power supply installations and apparatus

CONTROLLER

The AARU system is used to dissipate the braking energy through electrical resistors. It is composed of:

- BRU (braking resistor unit)
- Braking resistors control unit, which is mainly composed of:
  - IGBT stacks
  - Control board
  - PLC + HMI

IGBT AARU control unit – Inner view

IGBT AARU control unit – Side view

Resistor bank

The braking resistor bank is designed with 1 or several sections (groups) of resistors connected in a serial / parallel arrangement.

The braking energy of the trains is dissipated in these resistors.

	Unit	Values
Element material	-	Stainless steel AISI 304
Over-temperature protection	-	Thermostat
Enclosure material	-	Carbon steel
Finishing	-	Hot dipped galvanized ISO 1461
Cooling	-	Natural air cooling
Peak power	[MW]	Up to 7.5
Installation		Outdoor

EASY MAINTENANCE

Withdrawable IGBT stack for easy maintenance operations.

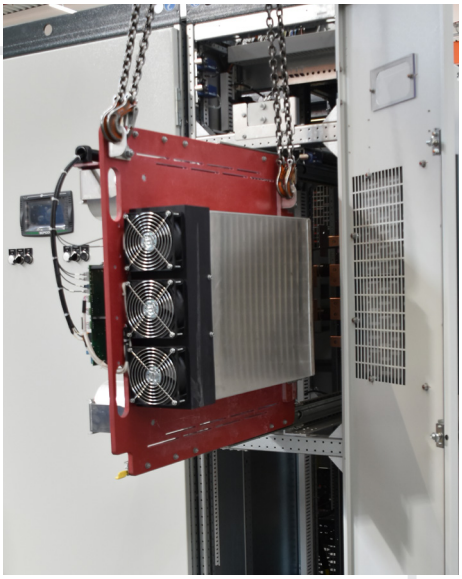

ARCHITECTURE

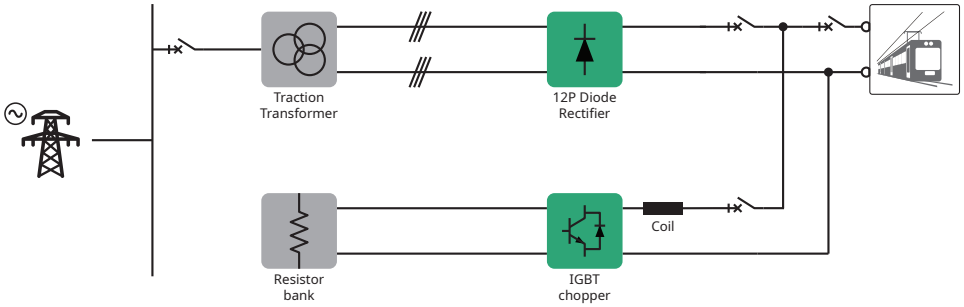

Simplified single line diagram

AARU controller line up protected with Sécheron high-speed circuit breakers panels MBS-HD

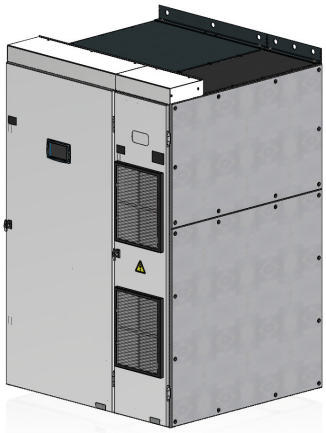

MAIN COMPONENTS

All critical main parts of AARU are designed and produced by Sécheron.

High-speed circuit breakers panels MBS-HD

IGBT AARU stacks

Two different control units perform different duties to control the AARU:

- SEPCOS
- Real-time control unit

SEPCOS

SEPCOS is a powerful electronic system based on microprocessor technology.

In this application it is used to supervise the whole AARU system and perform all low tasks.

It provides the communication interface between the client and digital control unit.

SEPCOS Display

Sécheron system contains user-friendly interface, which is associated through a high resolution 7" color display, capacitive dual touch screen allowing easy and intuitive navigation.

This device is equipped with 8 LEDs related to dynamic labels (color and text).

It collects the information available from the SEPCOS and the RealXXXXXX and used to interact with the AARU control system.

REAL-TIME CONTROL UNIT

Real-time control unit is designed to provide the high-speed control of the system and it is used to perform fast and reliable regulation.

Signals are transmitted to gate drivers through fiber-optics to achieve galvanic separation between circuits.

Additionally, each driver is equipped with two optical fibers to receive and send the feedback of IGBT process.

Sécheron SA
Rue du Pré-Bouvier 25
1242 Satigny - Geneva
CH-Switzerland

www.secheron.com
Tel: +41 22 739 41 11
Fax: +41 22 739 48 11
tps@secheron.com

Copyright© • 2026 • Sécheron SA

This document is not contractual and contains information corresponding to the level of technology at the date of printing. Sécheron reserves the right to modify and/or improve the product, whose characteristics are described in these documents, as required by new technology at any time. It is the purchaser's responsibility to inform himself, no matter what the circumstances, of the product's maintenance conditions and requirements. Sécheron reserves all rights, especially those arising from our "General Delivery Conditions".

SG866829BEN_A02-01.26